CLARUS ENVIRONMENTAL
Zoeller Family of Water Solutions™

Fusion® SERIES TREATMENT SYSTEM
Installation and Startup Checksheet

CL0301E
0210
Supersedes
New

Owner Information	Installer Information
Owner's Name:	Name:
Address:	Address:
Installation Address (if different):	
Phone Number:	Phone Number:
Fax Number:	Fax Number:
Email Address:	Email Address:

General Information	
Fusion® Model: ☐ZF-450 ☐ZF-600 ☐ZF-800 Serial Number:	Installation Date: Startup Date: Septic Tank prior to Fusion®: ☐Yes ☐No Size: _____
Actual Number of Residents:	Number of Bedrooms:
Type of Water Supply: ☐Municipal ☐Well ☐Cistern	Water Softener: ☐Yes ☐No Garbage Disposal: ☐Yes ☐No
Soil Absorption Type: _____	System Type: ☐Repair ☐New Construction ☐Demo.

I. Fusion® Layout

1. Fusion® laid-out to proper grades and depths? ___ Yes ___ No

II. Excavation

1. Size of Excavation L _____ W _____ H _____
   (No more than 36" cover over Fusion®)
2. Rock/obstructions in excavation? ___ Yes ___ No
3. Water table present? ___ Yes ___ No
   (Anti-flotation device required if yes)

Fusion® DIMENSIONS					
SYSTEM	**L**	**W**	**H**	**I**	**E**
Fusion® 450	7'-1"	3'-8"	5'-2"	4'-4"	3'-10"
Fusion® 600	8'	4'-1"	5'-6"	4'-8"	4'-2"
Fusion® 800	8'-3"	4'-8"	6'-2"	5'-4"	4'-10"

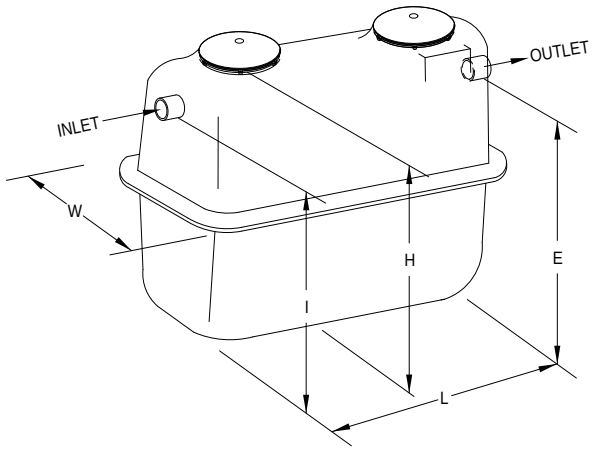

NOTES:

1) DIMENSIONS "I" AND "E" ARE TO THE BOTTOM OF THE INLET/OUTLET PIPE.
2) THE OVERALL HEIGHT DIMENSION "H" IS TO THE TOP OF THE NARROW ADAPTER RING, NOT THE RISER LID.
3) A RISER COVER COMES STANDARD. ADDITIONAL RISERS ARE PURCHASED SEPERATELY.

SK2624

The Fusion® Series Treatment Systems represent a collaboration with Fuji Clean Co., Ltd.

© Copyright 2010. All rights reserved.

III. Fusion® Installation

1. Rock Pad 4-6 Inches Deep? ___ Yes ___ No
   (1/4" - 1/2" diameter gravel)
2. Fusion® Checked for Damage? ___ Yes ___ No
3. Fusion® Leveled? ___ Yes ___ No
4. Fusion® Secured by Anti-Flotation Device? ___ Yes ___ No
   (Required in high water tables)
5. Fusion® Filled with Water? ___ Yes ___ No
6. Fusion® Checked for Leakage? ___ Yes ___ No

IV. Control Panel Installation

1. Installed Properly? ___ Yes ___ No
   (Check National Electrical Code and Local/State Codes)
2. Blower Wired Properly? ___ Yes ___ No
3. Pressure Sensor Connections Checked? ___ Yes ___ No
4. Alarm Float Wired Properly? ___ Yes ___ No
5. Panel Tested and Operational? ___ Yes ___ No
6. Timer dial set to 36 hours? ___ Yes ___ No

V. Blower Installation

1. Installed Properly? ___ Yes ___ No
2. Accessible? ___ Yes ___ No
3. Well Ventilated? ___ Yes ___ No
4. Protected from Inundation? ___ Yes ___ No
5. Diameter of Airline? _____ Inches
6. Length of Airline? _____ Ft. _____ Inches
7. Airline Connections Checked? ___ Yes ___ No
8. Pressure Sensor Connections Checked? ___ Yes ___ No
9. Blower Tested and Operational? ___ Yes ___ No

VI. Fusion® Backfilling

1. Backfilled with Proper Material? ___ Yes ___ No
2. Backfill Tamped around Fusion®? ___ Yes ___ No
3. Final Grade Mounded around Fusion®? ___ Yes ___ No

VII. Startup

1. Blower Settings:
   Time of Day Set? ___ Yes ___ No
   Backwash Time Set? ___ Yes ___ No
   Backwash Frequency per day: ☐ 1 ☐ 2
   Backwash Duration: ☐ 5 min. ☐ 10 min.
2. Recirculation Flow Rate:
   sec/L _____ valve position _____%
3. Backwash Flow Rate:
   sec/L _____ valve position _____%
4. Blower Returned to Auto-backwash? ___ Yes ___ No
5. Seeding Material Added? ___ Yes ___ No
6. Riser Lids Secured with Screws? ___ Yes ___ No

Model	ZF450	ZF600	ZF800
Recirculating flow rate (GPM)	0.4 - 0.6	0.5 - 0.8	0.7 - 1.1
Recirculating flow rate (sec/liter)	29 - 45	21 - 32	14 - 22
Suggested Valve Opening %	35 - 40	30 - 35	30 - 35

Model	Frequency	ZF450	ZF600	ZF800
Backwash flow rate (GPM)	Twice/day	1.6 - 2.4	2.1 - 2.9	2.6 - 4.0
Backwash flow rate (sec/liter)	Twice/day	7 - 10	5 - 7	4 - 6
Valve open (%)	Twice/day	50 - 55	40 - 45	40 - 45

NOTES

All Clarus Environmental products must be installed and maintained in accordance with all applicable codes.
Product information presented here reflects conditions at time of publication. Consult factory regarding discrepancies or inconsistencies.

© Copyright 2010. All rights reserved.